KEILHAUER

End of Product Life

Conference, Executive & Task Chairs

Contents

Document Disclaimer:
This document will be reviewed, updated periodically, and is subject to change without notice. Keilhauer is not responsible for slight deviations in the data and information contained in this document. Product recyclability and material content data is calculated using base models only. Textiles and associated weights are not accounted for in the analysis. Criteria for recyclability has been assessed against available recycling facilities in at least 6 of the 10 U.S. EPA regions. Average recyclability is based on individual component weights. Some Keilhauer parts are adhered together which can present challenges when disassembling.

End of Product Life Introduction

Keilhauer Conference, Executive and Task chairs are multi-functional; combining unparalleled comfort with aesthetic appeal for meeting rooms, boardrooms and private offices. Once your Keilhauer chair or component reaches the end of its life, the whole product doesn't have to end up in a landfill. Many of the parts and materials still have value, and can be repaired, replaced, or recycled to avoid an afterlife as waste.

This document provides instructions for component disassembly that can be applied to our Conference, Executive and Task chair collection. A detailed breakdown of components and the materials they are made of for each product follows the instructions, as well as an outline of how to recycle these components after disassembly. Disassembly should take between 10-30 minutes depending on the product and model. Safety glasses and safety gloves are recommended throughout the disassembly process.

Repairability and Recyclability

Keilhauer products are made to last a long and useful life, therefore products are component based and are designed with modularity in mind. We take pride in the extra steps we take to ensure that parts are indeed replaceable over time. We also ensure that we mean what we say with our 10 year Warranty Policy (see our Warranty Policy for more details).

Depending on the specific model and year, product parts can generally be easily repaired or simply replaced at home using standard tools. Some components are more complex and require the assistance of a trained Keilhauer Service Technician for replacement. For more details about your specific product, please contact our Warranty department.

The following are our standard components and general information on replaceability. For product specific details, please refer to the Materials & Components Table on pages 10 through 15.

Anatomy of a Product

A.	Back
B.	Arms
C.	Seat
D.	Base
E.	Mechanism
F.	Cylinder
G.	Casters

Standard Components

Back

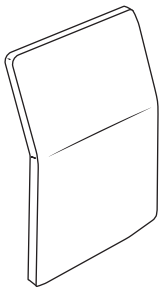

Depending on the specific model this unit may be replaceable. In some products the Back and Seat is one unit, for example some mesh components. In most cases these units are also replaceable.

Upholstered Back

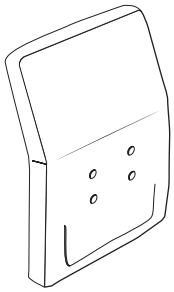

Depending on the model, entire upholstered back units including the seat pan, foam and covering are replaceable. Note: depending on the specific product model assistance from a trained Keilhauer Representative may be required.

Seat

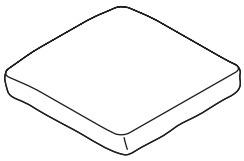

Depending on the model this unit may be replaceable. In some products the Back and Seat is one unit, for example some mesh components. In most cases these units are also replaceable.

Upholstered Seat

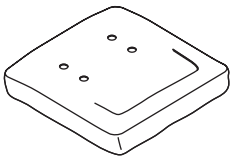

Depending on the model, entire upholstered seat units including the seat pan, foam and covering are replaceable. Note: depending on the specific product model assistance from a trained Keilhauer Representative may be required.

Standard Components

Base

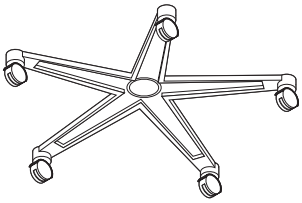

Depending on the specific model and year, bases are generally replaceable.

Mechanism / Cylinder

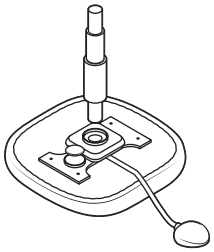

Depending on the specific model and year, mechanisms and cylinders are generally replaceable.

Frame

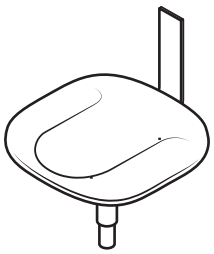

Most frames are not replaceable as they are generally part of a larger component like the seat and/or back.

Arms

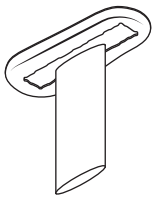

Depending on the specific model and year, arms and/or arm caps are generally replaceable.

Upholstery

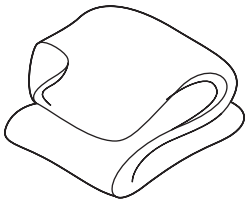

Depending on the specific model, year and material availability, upholstery may be replaceable at Keilhauer facilities.

Foam

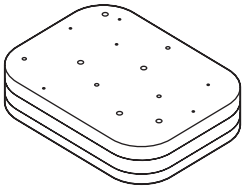

As this component is fixed within a larger unit, this specific component is not replaceable on its own. Upholstered seat or back units may be replaceable depending on the product.

Glides

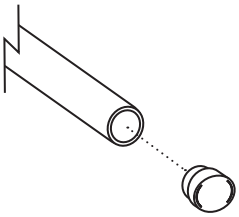

Depending on specific model and unit, glides are generally replaceable.

Casters

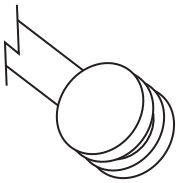

Depending on specific model and unit, casters are generally replaceable.

Tools Required

Screwdriver* | Box Cutter | Mallet | Needle Nose Pliers | Painter's Spatula | Adjustable Wrench or Socket Set* | Safety Glasses | Safety Gloves

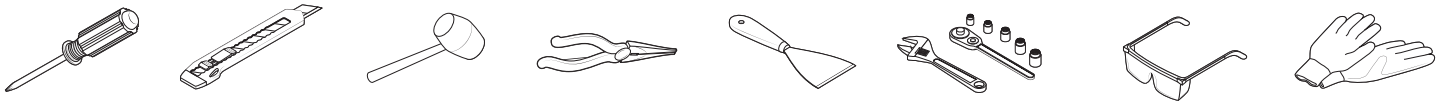

**To determine the screwdriver types and bits required for each product refer to the Materials and Components Table on pages 10 through 15.*

Disassembly Instructions

Removing the Star Base

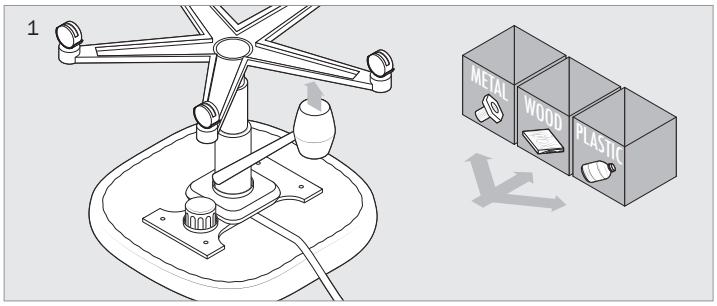

Place the chair upside down on a table surface with the back hanging off the edge. Holding the chair base down with one hand, and holding a mallet in the other hand, use some force and tap the star base in an upward motion to 'pop' the star base off. Set aside and refer to page 9 for recycling details.

Removing the Cylinder

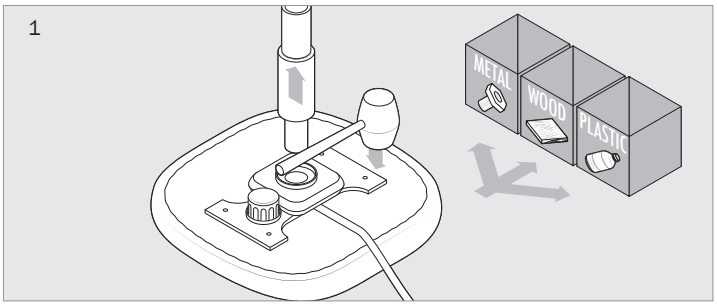

Place the chair upside down on a table surface with the back hanging off the edge. Pulling the cylinder upwards with one hand and holding the mallet with the other, tap the chair in a downward motion. This will release the cylinder from the chair. Set aside and refer to page 9 for recycling details.

Removing the Mechanism from the Seat

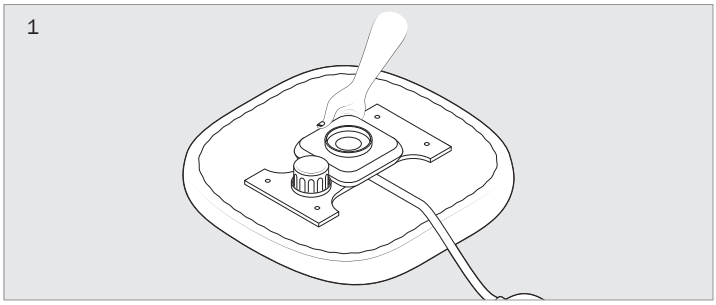

'Pop' off the plastic cover that hides the hardware using your fingers, or by wedging a flathead screwdriver in between the plastic components. Locate and remove the screws using a screwdriver. If there is no cover, simply remove the screws.

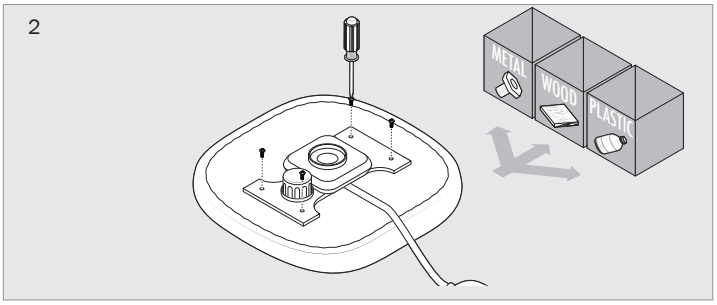

To remove the bracket that holds the seat, use a screwdriver to remove all visible screws. Set the screws, bracket and plastic cover aside and refer to page 9 for recycling details.

Removing the Textile and Foam from the Seat

OPTION 1: Upholstery Sewn-in and/or with Visible Screws

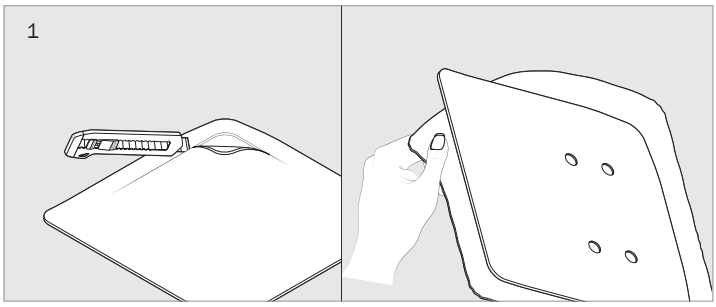

To remove the textile, the seat must be detached from the base/mechanism (see instructions *above*). Using a box cutter or blade, cut along the seams or along the zippers to expose the foam. Pull off the textile and set aside.

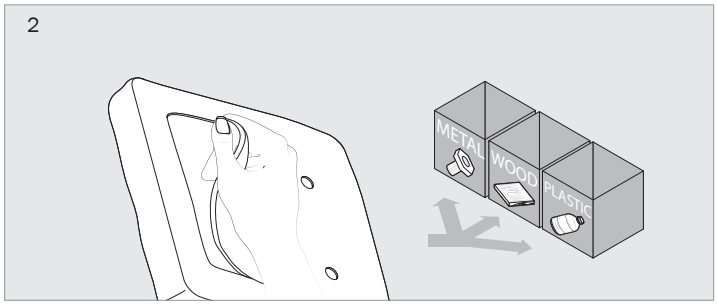

Using a box cutter or blade, cut and peel off the foam and set aside. Refer to page 9 for recycling details.
Note: depending on the model, the seat pan may be made of wood, plastic or metal.

OPTION 2: Upholstery Fastened in Place with Staples

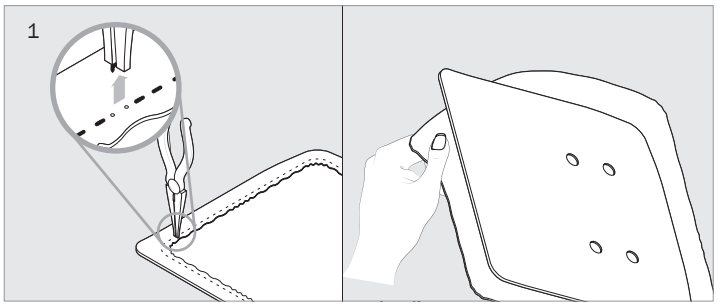

To remove the textile, the seat must be detached from the base/mechanism (see instructions *above*). Using needle nose pliers, remove the staples to expose the edge of the textile. Using some force, carefully pull the textile off the plastic seat pan.

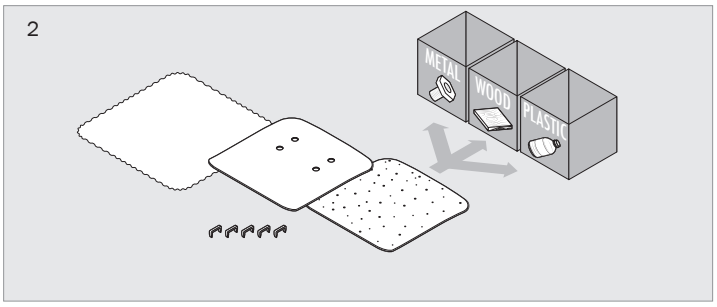

Set aside the staples, textile and foam and refer to page 9 for recycling details.
Note: depending on the model, some textile will be attached to the foam.

Removing the Back Cover from the Frame

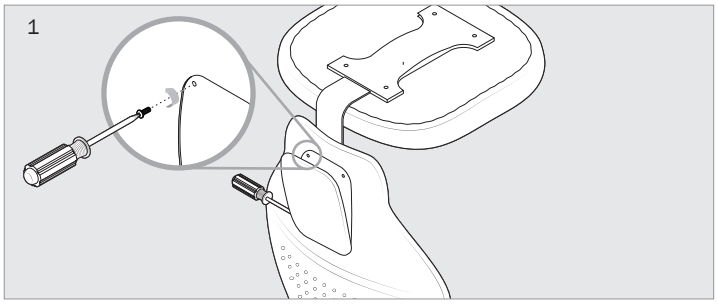

Place the seat upside down on a table surface. Using a flathead screwdriver, wedge the tip in between the back bracket and plastic cover and 'pop' the cover off. This exposes the hardware that fastens the back to the bracket. Locate the screws and use a screwdriver to remove all visible screws in order to remove the back plate.

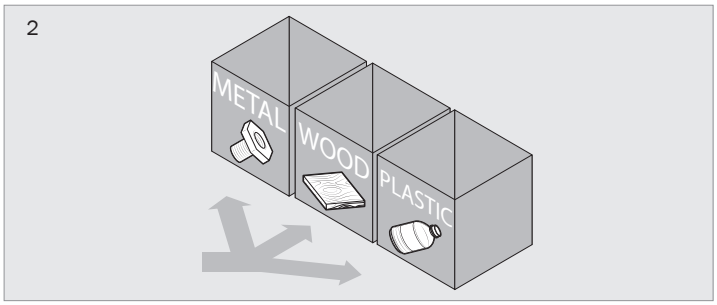

Set all plastic parts aside. Set the mechanism aside and refer to page 9 for recycling details.

Disassembling the Back Panel

OPTION 1: Plastic Back Screwed to Upholstery

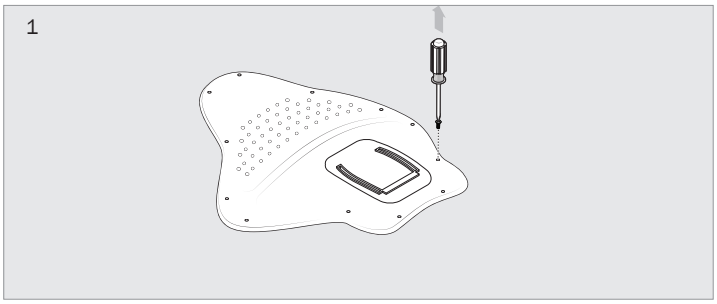

Locate visible screws on the back, and remove the screws using a corresponding screwdriver. Set the screws aside.

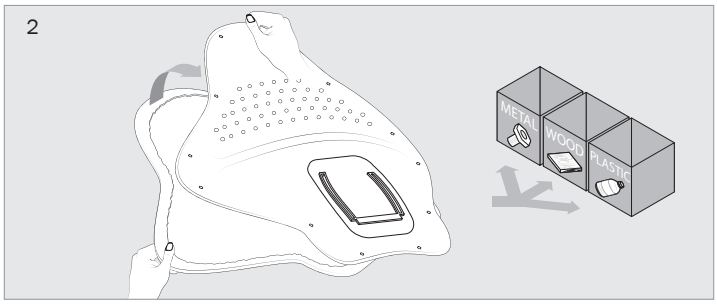

Using your hands, pull the upholstered part from the plastic back, and set aside. Refer to page 9 for recycling details.

OPTION 2: Back Panel Snapped in Place

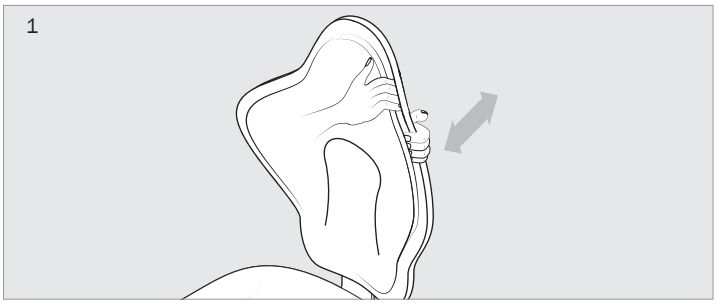

If there are no visible screws on the back, using moderate force simply 'pop' the back portion off by wedging your fingers between the plastic and the upholstery. Set the plastic plate aside.

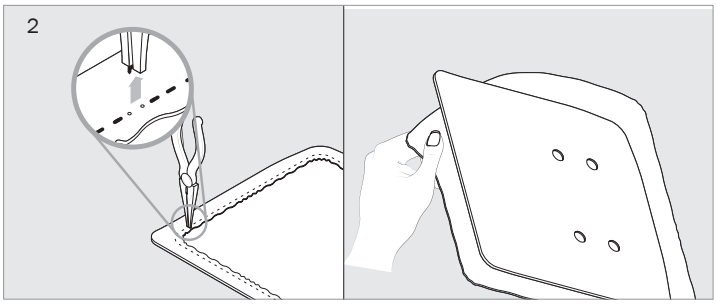

Using needle nose pliers, remove the staples to expose the edge of the textile. Using some force, carefully pull the textile off the plastic seat pan.

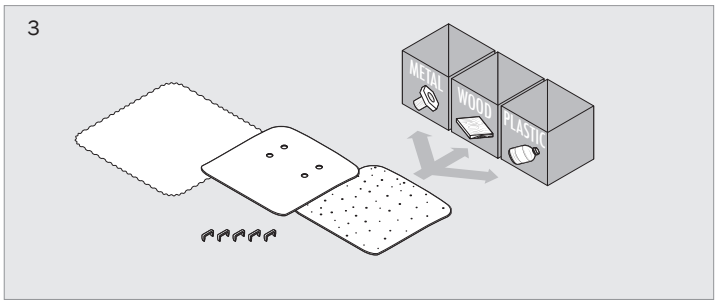

Set aside the staples, textile and foam and refer to page 9 for recycling details.

OPTION 3: Fully Sewn-in Upholstered Back

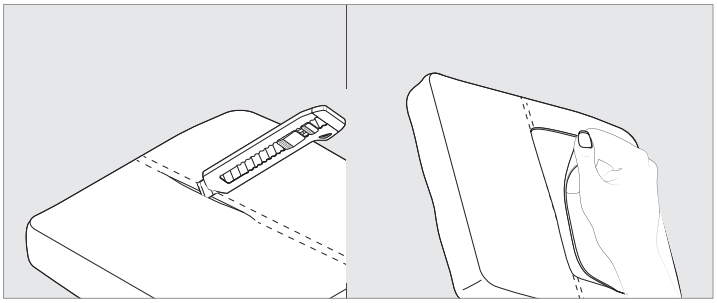

Using a box cutter, cut along the zipper or stitching to expose the foam within. Remove textile and set aside.

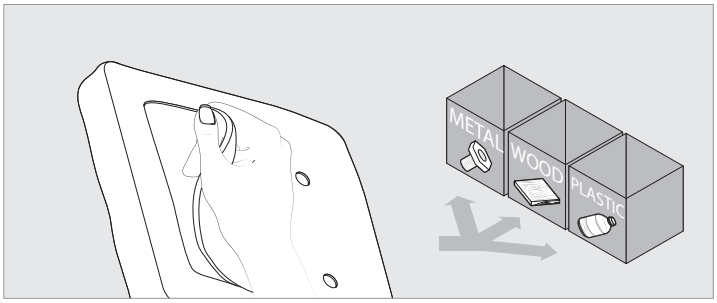

Using a box cutter, and/or painter's spatula, remove the foam from the back pan. Set foam and seat pan aside and refer to page 9 for recycling details.
Note: Depending on the model, the back pan may be made of wood, plastic, or metal.

Removing the Arms

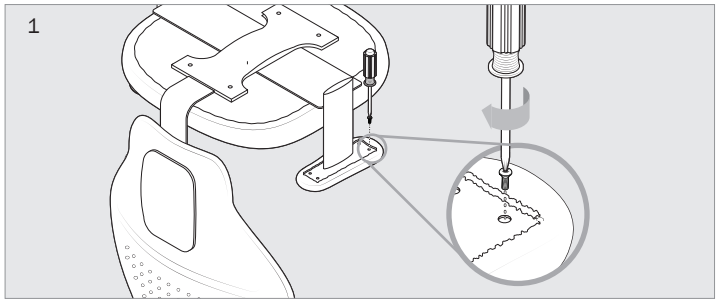

Flip the chair upside down onto a table surface. Locate the screws and use a screwdriver to remove the screws. Using your hands, pull off any arm caps. Set the plastic and metal parts aside.

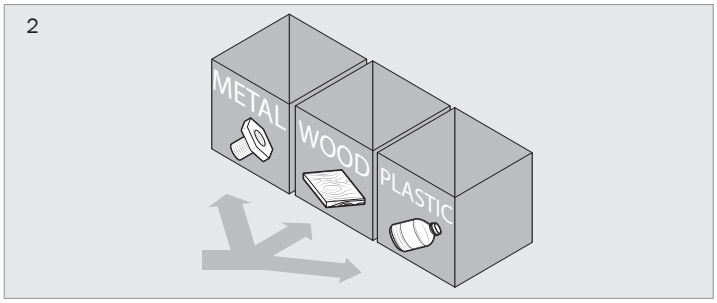

Refer to page 9 for recycling details.

Recycling the Disassembled Product

Our goal is Closed-Loop Manufacturing, and this extends to our product's end of useful life. Through our Design for Environment (DFE) program, we ensure that we design our products with high quality, long-lasting materials. We also aim to design them to be easily disassembled, and that the materials are recyclable across all municipalities.

Our efforts, along with the efforts of many municipalities across the globe have taken great strides towards environmentally responsible materials management. Still, some materials may or may not be fully recyclable in certain areas. The recyclability of a material depends on the volume available, whether there is an end market for the material, purity of the material (avoid coatings, mixed materials, etc.), and availability of recycling infrastructure (is there a collection method, a processing facility, etc.).

The following outline provides some basic information regarding the most common Keilhauer materials. For more information regarding recyclable materials in your area, please contact your local municipality or recycling company.

WOOD

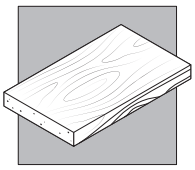

Type:	Hardwood, Plywood, MDF
Recyclability:	Recyclable
Value:	$0 – $1/board foot USD
How to recycle:	Contact local recycling companies or your local municipality.

TEXTILE

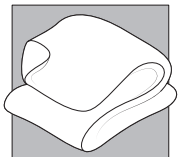

Type:	Leather, Nylon, Polyester
Recyclability:	Recyclable
Value:	Leather $0.20/lb. – $0.32/lb. USD Nylon $0.06 – $0.25/lb. USD Polyester $0.06 – $0.25/lb. USD
How to recycle:	Contact local recycling companies or your local municipality.

METAL

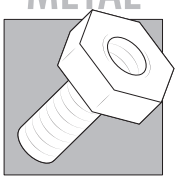

Type:	Steel, Aluminum, Zinc
Recyclability:	Recyclable
Value:	Steel $0.50/lb. – $0.60/lb. USD Aluminum $0.65 – $0.95/lb. USD Zinc $0.42 - $0.71/lb USD
How to recycle:	Contact local scrap metal dealers, recycling companies or your local municipality.

PLASTIC & FOAM

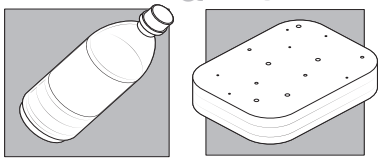

Type:	Acetal (POM), Acrylonitrile Butadiene Styrene (ABS), Glass-filled Polypropylene (PP-GF15), Glass-filled Nylon (PA-GF15, PA-GF27, and PA-GF30), Medium Impact Modified Nylon (PA6-MI), Medium Impact Modified Polypropylene (PP-MI), Nylon (PA), Polycarbonate (PC), Polyester (PEST), Polyethylene (PE and PE-HD), Polyurethane (PUR and PUR-HD), Polypropylene (PP), Styrene Butadiene/K-resin (SB), Thermoplastic Elastomer (PO-PE), Urethane (UR), Vinyl (V).
Recyclability:	ABS, PA, PC, PE, PP, and V – Widely recyclable PP-GF15, PP-MI, PA6-MI, PA-GF15/27/30, PEST, POM, PO-PE, PUR, SB, and UR – Not commonly recyclable
Value:	$0.06/lb. – $0.35/lb. USD
How to recycle:	ABS, PA, PC, PE, PP, and V – Contact recycling companies or recycle through your municipality (if accepted) PP-GF15, PP-MI, PA6-MI, PA-GF15/27/30, PEST, POM, PO-PE, PUR, SB, and UR – Contact local recycling companies.

Materials and Components

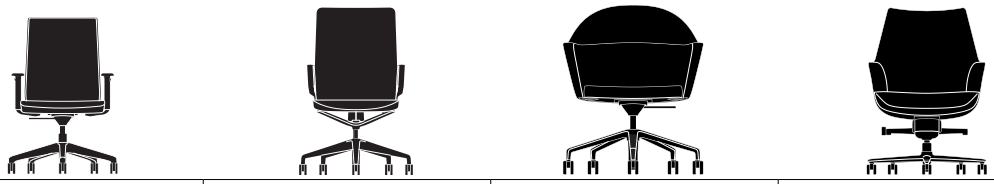

Possible Components	6C	AESYNC	COLLO	CONA
Upholstered Back	N/A	Polyurethane (PUR) foam, molded over plastic (PA-GF30, PP) with steel inserts	♻ Plywood and plastic (PP) with molded flexible polyurethane (PUR) foam	♻ Fiberglass reinforced rigid polyurethane (PUR) over molded with flexible polyurethane (PUR)
Upholstered Seat	Wood, polyurethane (PUR)	Polyurethane (PUR) foam, molded over plastic (PP-MI) inserts, attached to plastic (PA-GF30)	♻ Engineered plywood and base with molded flexible polyurethane (PUR) foam	♻ Fiberglass reinforced rigid polyurethane (PUR) overmolded with flexible polyurethane (PUR) [2]
Back	Nylon mesh (PA)	♻ Polyester (PEST) mesh, plastic (PA-GF30)	N/A	N/A
Seat	Nylon mesh (PA)	N/A	N/A	N/A
Frame	Plastic (PA-GF30)	Plastic (PA-GF30) and aluminum [2]	Steel [2]	Fiberglass reinforced rigid polyurethane (PUR) overmolded with flexible polyurethane (PUR) [2]
Foam	Polyurethane (PUR)	Polyurethane (PUR)	Polyurethane (PUR)	Polyurethane (PUR)
Glides	N/A	N/A	N/A	N/A
Arms	Plastic (PA-GF30, PA-GF38)	Aluminum	N/A	N/A
Arm Caps	Polyurethane (PUR), steel	♻ Plastic (PA) or textile	N/A	N/A
Tablet	N/A	N/A	N/A	N/A
Mechanism/Cylinder	Steel, plastic, (POM, PA, PA-GF30, ABS), aluminum, rubber	♻ Steel, plastic, (PA-GF30, POM, PP-MI)	♻ Steel	♻ Steel, plastic (POM), rubber
Base	Plastic (PA-GF30) or aluminum	♻ Aluminum or plastic (PA-GF30)	♻ Aluminum or plastic (PA-GF30)	♻ Aluminum
Casters	Steel, plastic (PP)	♻ Plastic (PP), steel	♻ Plastic (PP), steel	♻ Plastic (PA), steel
Disassembly Screwdriver(s)	3/16” Hex bit T-15 Torx bit Phillips	3/16” Hex bit	5/32” Hex bit 4mm Hex bit	5/32” Hex bit 3/16” Hex bit
Average Weight (kg)	12.29	15.08	11.37	15.16
Average Recyclability*	39.29 %	51.60 %	79.64 %	46.00 %

* See Document Disclaimer (p 2)

♻ Component replaceable

[1] Back and seat are one unit

[2] Seat and frame are one unit

[3] Trained Keilhauer Service Technician required

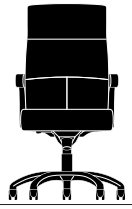
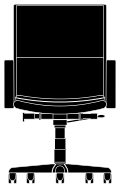
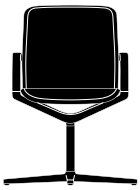


Possible Components	DANFORTH	ELITE	FILO	JUNIOR
Upholstered Back	♻ Molded high density rigid and flexible polyurethane (PUR) foam	♻ Molded high density rigid and flexible polyurethane (PUR) foam, and steel	N/A	♻ Molded flexible polyurethane (PUR) foam over plastic (PA6-MI)
Upholstered Seat	♻ Steel, molded high density rigid and flexible polyurethane (PUR)	♻ Engineered plywood base with molded rigid and flexible polyurethane (PUR) foam	Rigid polyurethane (PUR) over molded with flexible polyurethane (PUR), plastic (POM), rubber, steel	♻ Molded flexible polyurethane foam (PUR) over plastic (PA6-MI)
Back	N/A	N/A	♻ Polyester (PEST) mesh[1], plastic (PA6-MI)	Plastic (PA6-MI)
Seat	N/A	N/A	♻ Polyester (PEST) mesh[1] Plastic (PA6-MI)	N/A
Frame	Steel	Steel	Aluminum	Reinforced plastic (PA6-MI) and steel[2]
Foam	Polyurethane (PUR)	Polyurethane (PUR)	Polyurethane (PUR)	Polyurethane (PUR)
Glides	N/A	N/A	N/A	N/A
Arms	♻ Steel with polyurethane (PUR) foam	♻ Open: Urethane (UR) Closed: Steel and polyurethane (PUR)	Plastic (POM)	♻ Reinforced plastic (PA-GF30)
Arm Caps	Urethane (UR) or textile	N/A	N/A	Urethane (UR)
Tablet	N/A	N/A	N/A	N/A
Mechanism/Cylinder	♻ Steel, plastic (POM) rubber, aluminum	♻ Steel, plastic (POM, PP, PA, ABS), rubber	♻ Steel, plastic (POM, PP, PA, ABS), rubber	♻ Steel, aluminum, plastic (POM, PA), rubber
Base	♻ Aluminum or plastic (PA-GF30)	♻ Aluminum	♻ Aluminum	♻ Aluminum or reinforced plastic (PA-GF27)
Casters	♻ Plastic (PA), steel	♻ Plastic (PA), steel	♻ Plastic (PA), steel	♻ Plastic (PA), steel
Disassembly Screwdriver(s)	1/2” Socket 3/16” Hex bit	3/16” Hex bit 1/4” Hex bit 3/32” Allen key	3/16” Hex bit Torx M5 - X25	Quadrex 1/8” Hex bit
Average Weight (kg)	29.41	24.37	12.39	17.83
Average Recyclability*	56.26 %	44.99 %	70.99 %	13.80 %

* See Document Disclaimer (p 2)

♻ Component replaceable

[1] Back and seat are one unit

[2] Seat and frame are one unit

[3] Trained Keilhauer Service Technician required

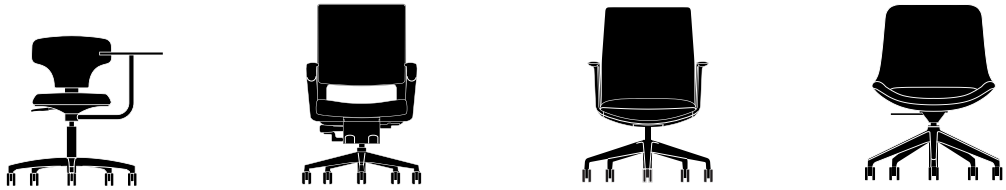

Possible Components	JUSKY	MORLEY	ORIGN	PONDER
Upholstered Back	Rigid polyurethane (PUR) with fiberglass sheet inlay, plastic (ABS)	♻ Plastic (PA6-MI) back frame, flexible polyurethane (PUR) foam over plastic (PP) back pan[3]	Steel overmolded with flexible polyurethane (PUR) foam	Rigid polyurethane (PUR) with fiberglass inlay, molded over with flexible polyurethane
Upholstered Seat	Wood molded with polyurethane (PUR) foam, upholstered in silicone rubber	♻ Plastic (PP) molded rigid and flexible polyurethane foam[3]	Plastic (PA-GF30) overmolded with flexible polyurethane (PUR) foam	Rigid polyurethane (PUR) with fiberglass inlay, molded over with flexible polyurethane
Back	N/A	♻ Plastic (PEST) mesh[3]	N/A	N/A
Seat	N/A	N/A	N/A	N/A
Frame	Steel	Reinforced plastic (PA-GF30), aluminum	Aluminum	Steel
Foam	Polyurethane (PUR)	Polyurethane (PUR)	Polyurethane (PUR)	Polyurethane (PUR)
Glides	N/A	N/A	N/A	5-star: N/A
Arms	N/A	♻ Fixed: Steel overmolded with urethane (UR) Adjustable: Steel and plastic (PA-GF30)	Aluminum	Rigid polyurethane (PUR) with fiberglass inlay, molded over with flexible polyurethane
Arm Caps	N/A	Urethane (UR)	Urethane with plastic (PP) insert or upholstered cap	N/A
Tablet	Steel plate over molded with polyurethane (PUR)	N/A	N/A	N/A
Mechanism/Cylinder	Steel, plastic (PA6-GF30)	♻ Steel, rubber	Aluminum, steel	Steel, plastic (POM, PA-GF30, PA, ABS), aluminum
Base	Plastic (PA-GF30) or aluminum	♻ Aluminum or reinforced plastic (PA-GF30)	Aluminum or plastic (PA-GF30)	Plastic (PP), steel
Casters	Steel, plastic (PP)	♻ Plastic (PP), steel	Steel, plastic (PP)	Nylon (PA) or aluminum
Disassembly Screwdriver(s)	3/32” Hex bit 3/16” Hex bit 5/32” Hex bit Phillips Quadrex	Quadrex Phillips	Phillips, No. 2 Quadrex, No. 2 3/16” Hex bit 5/32” Hex bit	3/16” Hex bit
Average Weight (kg)	12.13	19.68	18.23	12.56
Average Recyclability*	38.44 %	38.86 %	77.58 %	49.95 %

* See Document Disclaimer (p 2)

♻ Component replaceable

[1] Back and seat are one unit

[2] Seat and frame are one unit

[3] Trained Keilhauer Service Technician required

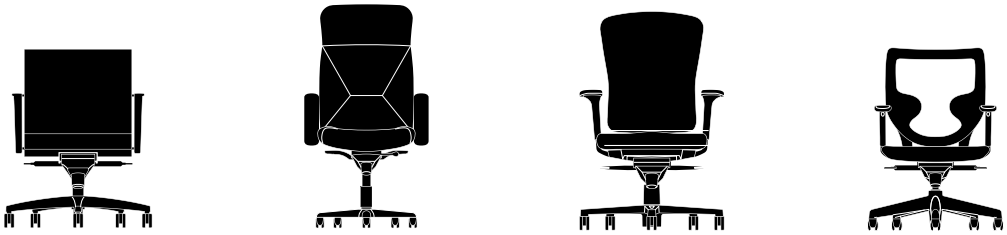

Possible Components	REEVE	RESPONS	SGUIG	SIMPLE
Upholstered Back	♻ Steel, molded rigid and flexible polyurethane PUR) foam	♻ Steel, molded rigid and flexible polyurethane (PUR) foam	♻ Plastic (PA-GF30, PP) molded flexible polyurethane (PUR) foam [3]	♻ Plastic (PP) molded with flexible polyurethane (PUR) foam
Upholstered Seat	♻ Steel, molded rigid and flexible polyurethane (PUR) foam	♻ Steel, molded rigid and flexible polyurethane (PUR)	♻ Plastic (PP-MI), molded flexible polyurethane (PUR) [3]	♻ Steel molded with flexible polyurethane (PUR) foam
Back	N/A	N/A	N/A	♻ Polyester (PEST) mesh, plastic frame (PA-GF30) and cover (PP)
Seat	N/A	N/A	N/A	N/A
Frame	Tubular steel	Steel	Plastic (PA6-GF30)	Plastic (PA-GF30)
Foam	Polyurethane (PUR)	Polyurethane (PUR)	Polyurethane (PUR)	Polyurethane (PUR)
Glides	N/A	N/A	N/A	N/A
Arms	♻ Urethane (UR) or aluminum	♻ Polyurethane (PUR) foam, steel	♻ Aluminum, plastic (PA-GF30)	♻ Plastic (PA-GF30) polyurethane (PUR) foam
Arm Caps	N/A	N/A	Urethane (UR)	N/A
Tablet	N/A	N/A	N/A	N/A
Mechanism/Cylinder	♻ Steel, plastic (POM)	♻ Steel, plastic (PA, POM), aluminum	♻ Steel, plastic (PA-GF30, PA, PP, POM)	♻ Steel, plastic (POM)
Base	♻ Aluminum or reinforced plastic (PA-GF30)	♻ Plastic (PA-GF30) base and/or wood caps	♻ Reinforced plastic (PA-GF30) or aluminum	♻ Reinforced plastic (PA-GF27) or aluminum
Casters	♻ Plastic (PP), steel	♻ Plastic (PA), steel	♻ Plastic (PP), steel	♻ Plastic (PA), steel
Disassembly Screwdriver(s)	Robertson 1/2” Socket 9/16” Socket 3/16” Hex bit 3/32” Allen key	1/2” Socket 3/16” Hex bit	Quadrex Phillips 3/16” Hex bit 4mm Hex bit 3mm Hex bit	Quadrex Robertson 3/16” Hex bit 5/32” Hex bit
Average Weight (kg)	20.36	24.90	17.59	15.69
Average Recyclability*	41.61 %	40.96 %	42.74 %	53.74 %

* See Document Disclaimer (p 2)

♻ Component replaceable

[1] Back and seat are one unit

[2] Seat and frame are one unit

[3] Trained Keilhauer Service Technician required




Possible Components	SKY	SWURVE	TOM	UNITY
Upholstered Back	Rigid polyurethane (PUR) with fiberglass sheet inlay, plastic (ABS)	Plastic (PA) frame with polyurethane (PUR) foam	♻ Plastic (PA-GF30) with polyurethane (PUR)	♻ Molded flexible polyurethane (PUR) foam over plastic (PA-GF30), and steel (headrest only)
Upholstered Seat	Wood molded with polyurethane (PUR), upholstered in silicone	Molded polyurethane (PUR) foam over plastic (PA-GF30) insert	♻ Molded polyurethane (PUR) foam over plastic (PA6-MI)	♻ Molded flexible polyurethane (PUR) foam over steel
Back	N/A	Mesh back (PEST)	N/A	N/A
Seat	N/A	N/A	N/A	N/A
Frame	Steel, plastic cone (PP)	Plastic (PA) and aluminum	Plastic (PA6-MI)[2]	Steel
Foam	Polyurethane (PUR)	Polyurethane (PUR)	Polyurethane (PUR)	Polyurethane (PUR)
Glides	Plastic (PE)	N/A	N/A	N/A
Arms	N/A	♻ Aluminum	♻ Plastic (PA-GF30)	♻ Urethane (UR), steel, aluminum
Arm Caps	N/A	Urethane (UR) arm cap with plastic (PA) insert	N/A	♻ Urethane (UR) cap with plastic (PP) insert, or upholstered cap
Tablet	N/A	N/A	N/A	N/A
Mechanism/Cylinder	Steel, plastic (PA6-GF30)	Steel, plastic (PA), rubber (POM)	♻ Steel, plastic (PA), rubber (POM)	♻ Steel, plastic (PA, POM), aluminum
Base	Aluminum (5-star) or Steel (4-leg)	♻ Reinforced plastic (PA-GF30) or aluminum	♻ Reinforced plastic (PA-GF30) and/or wood caps	♻ Aluminum
Casters	Steel, plastic (PP)	♻ Plastic (PP), steel	♻ Plastic (PA), steel	♻ Plastic (PP), steel
Disassembly Screwdriver(s)	Phillips Quadrex 3/32” Hex bit 3/16” Hex bit 5/32” Hex bit	Phillips 1/2” Socket wrench 1/8” Hex bit 5/32” Hex bit 3/16” Hex bit	Quadrex 1/8” Hex bit	Quadrex Phillips 3/16” Hex bit 1/4” Hex bit
Average Weight (kg)	8.43	14.60	22.98	18.97
Average Recyclability*	51.98 %	61.03%	33.06 %	25.60 %

* See Document Disclaimer (p 2)

♻ Component replaceable

[1] Back and seat are one unit

[2] Seat and frame are one unit

[3] Trained Keilhauer Service Technician required

Possible Components	VANILLA
Upholstered Back	♻ Steel with molded rigid and flexible polyurethane (PUR) foam
Upholstered Seat	♻ Molded rigid and flexible polyurethane (PUR) foam over plastic (PA-GF30)
Back	N/A
Seat	N/A
Frame	Steel
Foam	Polyurethane (PUR)
Glides	N/A
Arms	♻ Cast aluminum, or molded polyurethane (PUR) with steel insert
Arm Caps	Urethane (UR) cap with plastic (PP) insert, or upholstered cap
Tablet	N/A
Mechanism/Cylinder	♻ Steel, plastic (PA, POM), aluminum
Base	♻ Aluminum or plastic (PA-GF30)
Casters	♻ Plastic (PP), steel
Disassembly Screwdriver(s)	1/2” Socket 3/16” Hex bit 5/32” Hex bit 3/32” Allen key
Average Weight (kg)	18.97
Average Recyclability*	25.60 %

* See Document Disclaimer (p 2)

♻ Component replaceable

[1] Back and seat are one unit

[2] Seat and frame are one unit

[3] Trained Keilhauer Service Technician required